Full-length taper-grooved pin

Locating and connecting component. Geometry and tolerances are separate from materials and treatments; specify the required length in your quotation request.

DIN 1471 / ISO 8744 / ex UNI 7586

References: DIN 1471 / ISO 8744 / ex UNI 7586 · Tolerance / check: Groove geometry · Execution: See drawing and technical notes · Units: mm

Representative geometry photograph. Material and finish are specified separately.

Technical drawing

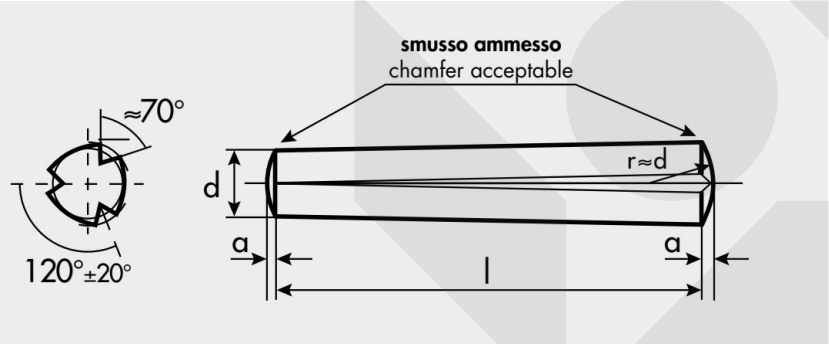

d	Nominal body diameter.
a	End portion identified in the drawing.
l / L	Required length, to specify in the enquiry.

Reference drawing by Gandini. Dimensions in mm; not to scale. L identifies the length to specify in the quotation.

https://www.dueemmesidol.it/en/products/complementary-fasteners/pins/din-1471/

Reference geometry

Dimensions in mm. Supply lengths are not listed: specify the required length in your enquiry.

The data identifies geometry, not availability. Diameter tolerance is distinct from length tolerance. A dash denotes an undocumented source dimension requiring verification on the supply drawing.

d	a ≈
1,5	0,20
2,0	0,25
2,5	0,30
3,0	0,40
4,0	0,50
5,0	0,63
6,0	0,80
8,0	1,00
10,0	1,20
12,0	1,60
16,0	2,00

Materials, grades, finishes and treatments

Material	Condition / requirements	Machining / finish
Free-cutting or carbon steel	Unhardened; specify material	Specify surface treatment

Materials and executions documented by the sources; specify them in your enquiry. Not all combinations are implied. Dueemme confirms grade, treatment, mechanical properties and availability in the quotation. A1/A2/A4 labels do not replace the metallurgical specification of the pin.

Documentation

Document	Status
Declaration of conformity	Subject to order agreement
Material certificate	Subject to order agreement
EN 10204 2.2 test report	Subject to order agreement
EN 10204 3.1 inspection certificate	Subject to order agreement
Dimensional inspection report	Subject to order agreement
Coating report	Subject to order agreement
Other documentation	Subject to order agreement

Batch documents are not automatically included: specify your requirements in the RFQ.

Tolerances, standards and installation

Nominal diameter is distinct from the diameter over the grooves. Do not apply plain-pin m6/h8 tolerances. Verify effective groove diameter, mating hole and insertion force against the governing standard and supply drawing.

Related ISO/UNI references do not establish automatic equivalence: confirm the governing standard, edition and supply drawing.

Technical references

Gandini - technical data